DmExtrudePolysolid

DmExtrude2D/2D

PolySolid

- Selectionmodes“”“”
- XY

-

1.
2. “”“”
3.

    -
    -

- UCS
- DYNDYNMODE“”
- STRACK
- ON

1. Polysolid
   [////] <>
2.
3. ShiftUCS
4.

    -
    -

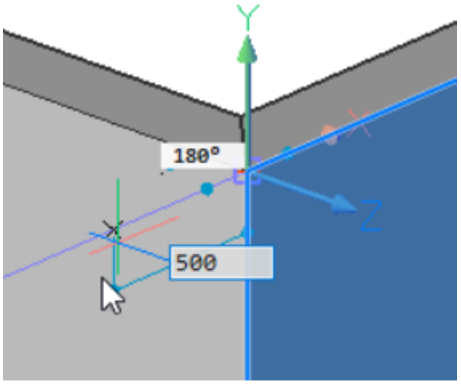

5. TAB“”TAB“”

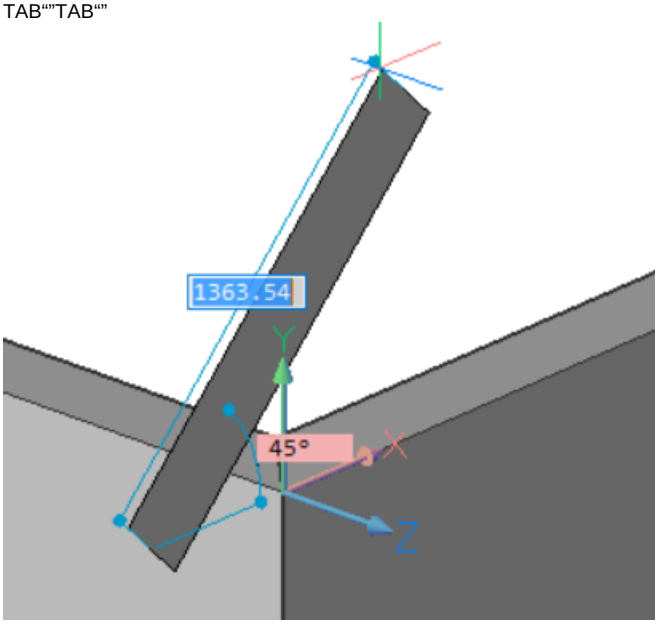

6. EnterEnterEnter
7.

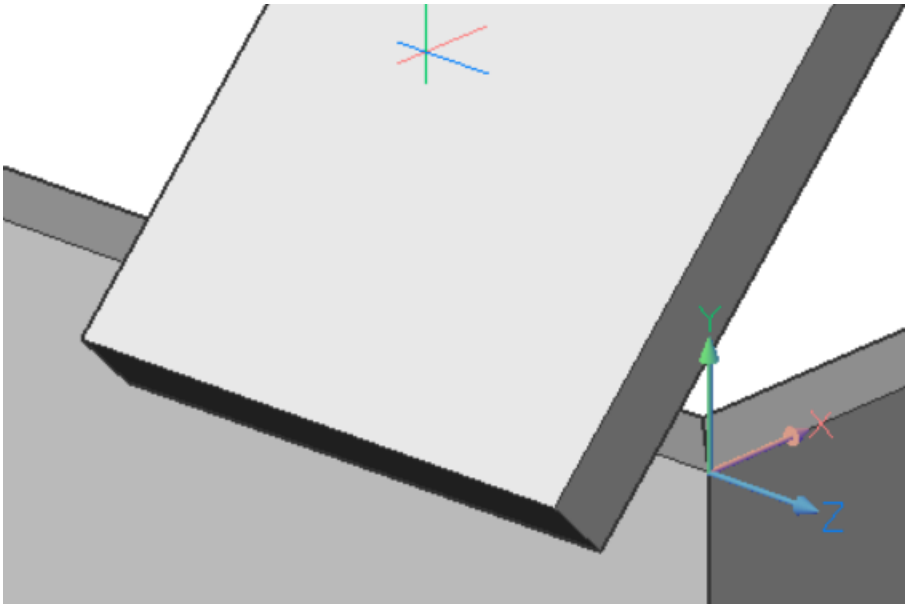

8.
9. ConnectWithNearest